Current part is item (14) on diagram. Available at www.oshkoshequipment.com

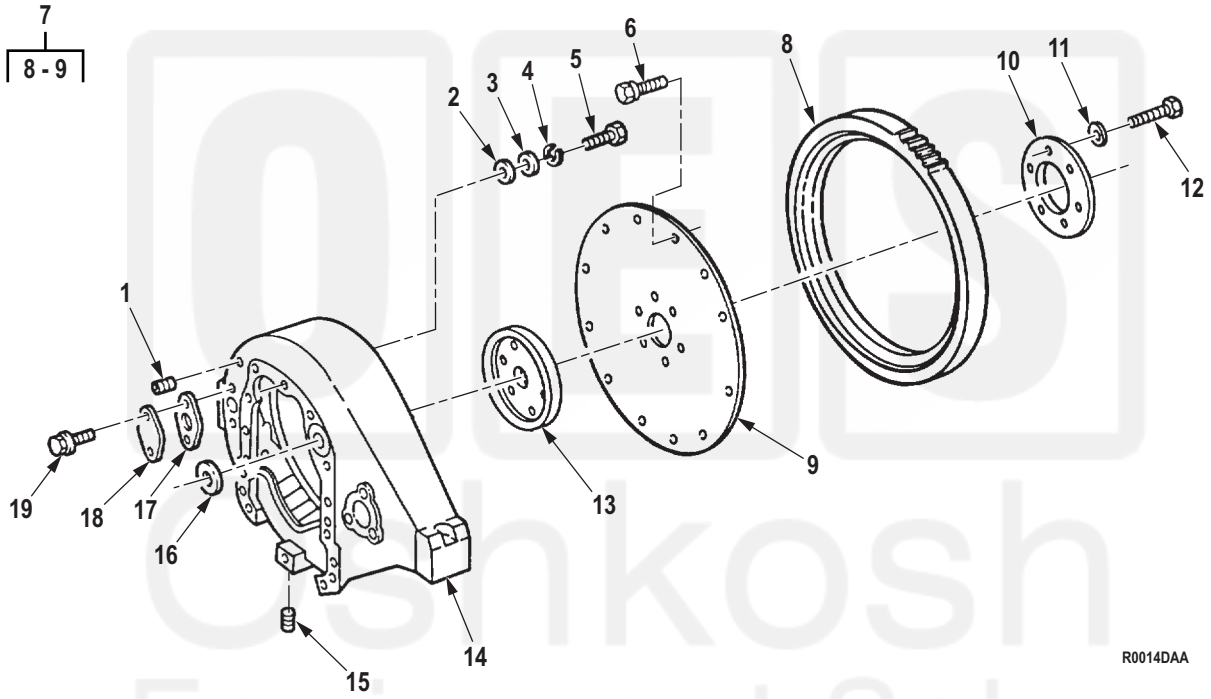

Figure 14. Flywheel Gear Assembly and Housing (M939, M939A1).

Current part is item (14) on diagram. Available at www.oshkoshequipment.com

Current part is item (14) on diagram. Available at www.oshkoshequipment.com

(1) ITEM NO.	(2) SMR CODE	(3) NSN	(4) CAGEC	(5) PART NUMBER	(6) DESCRIPTION AND USABLE ON CODE (UOC)	(7) QTY
11	PAFZZ	5310-00-134-4171	15434	200861	WASHER,FLAT UOC: DAC,DAD,DAE,DAF,DAG,DAH,DAJ,DAL,DAW,DAX,V14,V15,V16,V17,V18,V19,V20,V21,V22,V24	6
12	PAFZZ	5305-01-112-9698	15434	180175	SCREW,CAP,HEXAGON H UOC: DAC,DAD,DAE,DAF,DAG,DAH,DAJ,DAL,DAW,DAX,V14,V15,V16,V17,V18,V19,V20,V21,V22,V24	6
13	PAFZZ	2815-01-126-7404	15434	3007148	ADAPTER,CRANKSHAFT UOC: DAC,DAD,DAE,DAF,DAG,DAH,DAJ,DAL,DAW,DAX,V14,V15,V16,V17,V18,V19,V20,V21,V22,V24	1
14	PFHZZ	2805-00-404-2917	15434	3014979	HOUSING,FLYWHEEL UOC: DAC,DAD,DAE,DAF,DAG,DAH,DAJ,DAL,DAW,DAX,V14,V15,V16,V17,V18,V19,V20,V21,V22,V24	1
15	PAFZZ	4730-01-214-7081	15434	3008469	PLUG,PIPE UOC: DAC,DAD,DAE,DAF,DAG,DAH,DAJ,DAL,DAW,DAX,V14,V15,V16,V17,V18,V19,V20,V21,V22,V24	1
16	PAFZZ	5330-00-729-4427	79150	34834	GASKET PART OF KIT P/N 3011472 UOC: DAC,DAD,DAE,DAF,DAG,DAH,DAJ,DAL,DAW,DAX,V14,V15,V16,V17,V18,V19,V20,V21,V22,V24	1
17	PAFZZ	5330-01-082-6985	15434	3021735	GASKET UOC: DAC,DAD,DAE,DAF,DAG,DAH,DAJ,DAL,DAW,DAX,V14,V15,V16,V17,V18,V19,V20,V21,V22,V24	1
18	PFFZZ	5340-01-122-8002	15434	70657	COVER,ACCESS UOC: DAC,DAD,DAE,DAF,DAG,DAH,DAJ,DAL,DAW,DAX,V14,V15,V16,V17,V18,V19,V20,V21,V22,V24	1
19	PAFZZ	5305-01-135-5344	15434	3011342	SCREW UOC: DAC,DAD,DAE,DAF,DAG,DAH,DAJ,DAL,DAW,DAX,V14,V15,V16,V17,V18,V19,V20,V21,V22,V24	2

END OF FIGURE

Current part is item (14) on diagram. Available at www.oshkoshequipment.com